*TECHNICAL DATA SHEET*

# MT 835
## Manitou Telescopic

MANITOU
HANDLING YOUR WORLD

# MT 835

easy St. IIIB

MANITOU HANDLING YOUR WORLD

| | MT 835 easy |
|---|---|
| **Lifting** | |
| Max. capacity | 3500 kg |
| Max. lifting height | 7.75 m |
| Max. outreach | 4.45 m |
| Break-out force with bucket (ISO 8313) | 6400 daN |
| **Unladen time** | |
| Lifting | 6.5 s |
| Lowering | 6.0 s |
| Extension | 6.0 s |
| Retraction | 5.5s |
| Crowd | 4.0 s |
| Dump | 4.0 s |
| **Tyres** | 400 / 80 -24 |
| **Braking** | |
| Service brake | oil immersed multi-disc braking on front / rear axles |
| Parking brake | automatic negative parking brake |
| **Engine** | DEUTZ - STAGE 3B - FINAL TIER 4 |
| Type | TD 3.6 L |
| Cubic capacity | 3621 $cm^3$ |
| Power | 75 HP/55.4 kW |
| Max torque | 330 Nm |
| Injection | direct |
| Cooling | water |
| Laden drawbar pull | 8000 daN |
| **Transmission** | torque converter |
| Reversing shift | electrohydraulic control |
| Number of gears (forward/reverse) | 4/4 |
| Drive wheels | 4 wheel drive |
| Steering mode | 4 wheel steer - 3 steering modes |
| Max. travel speed (may vary according to applicable regulations) | 25 kph |
| **Hydraulics** | |
| Pump | gear type with priority valve 125 l/min – 270 bar |
| **Capacities** | |
| Hydraulic oil | 125 l |
| Fuel | 120 l |
| **Unladen weight (with forks)** | 7200 kg |
| **Dimensions** | |
| **1.** Front wheel centre to carriage | 1.49 m |
| **2.** Wheelbase | 2.88 m |
| **3.** Rear wheel centre to rear face | 0.87 m |
| **4.** Overall length to carriage | 5.24 m |
| **5.** Ground clearance | 0.42 m |
| **6.** Overall width of cab | 0.88 m |
| **7.** Inside tyre width | 1.87m |
| **8.** Overall width | 2.28 m |
| **9.** Overall height | 2.42 m |
| Turning radius (over tyres) | 3.65 m |
| Carriage rotation (crowd / dump) | 12° /114° |
| Standard forks (length x width x thickness) | 1200 x 125 x 45 mm |
| **Controls** | JSM® (Multi-function joystick) |
| **Safety** | Load limiter cut off system - EN 15000 norm<br>ROPS / FOPS level II standard cab |
| **Noise and vibration** | |
| Noise at driving position (LpA) | 78 dB |
| Environmental noise (LwA) | 103 dB |
| Vibration to whole hand/arm | <2.50 $m/s^2$ |

**Rough terrain load chart**
Standard EN 1459B

**Machine with forks on tyres**

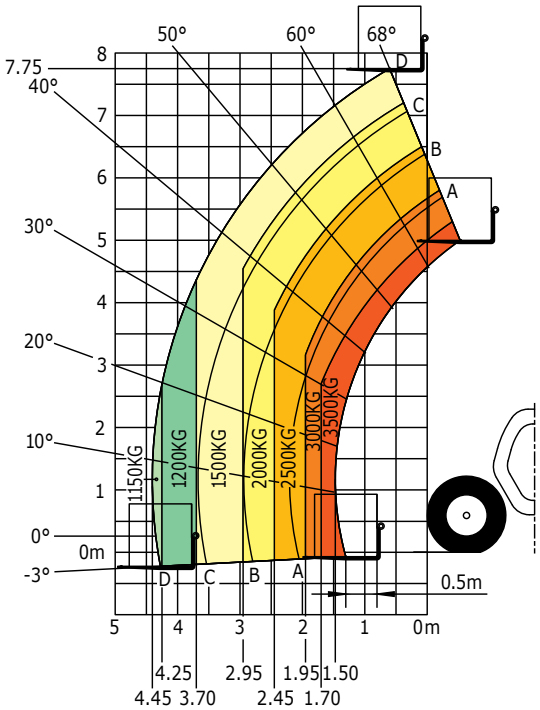


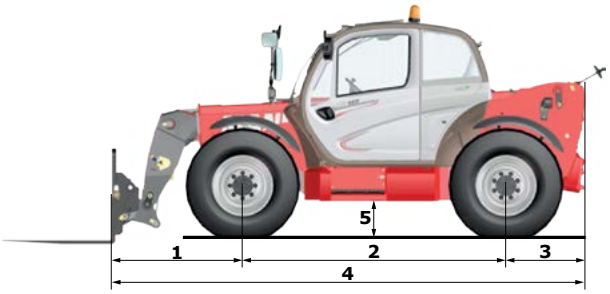


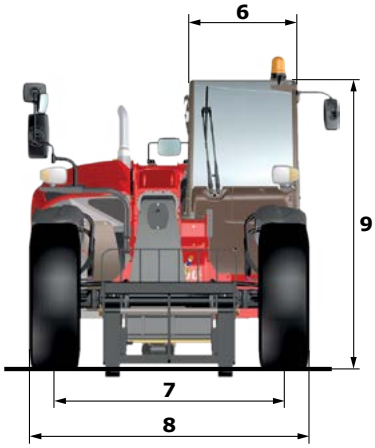


This brochure describes versions and configuration options for Manitou products which may be fitted with different equipment. The equipment described in this brochure may be standard, optional or not available depending on version. Manitou reserves the right to change the specifications shown and described at any time and without prior warning. The manufacturer is not liable for the specifications given. For more information, contact your Manitou dealer. Non-contractual document. Product descriptions may differ from actual products. List of specifications is not comprehensive. The logos and visual identity of the company are the property of Manitou and may not be used without authorisation. All rights reserved. The photos and diagrams contained in this brochure are provided for information only.
MANITOU BF SA - Limited company with board of directors - Share capital: 39,547,824 euros - 857 802 508 RCS Nantes

CE